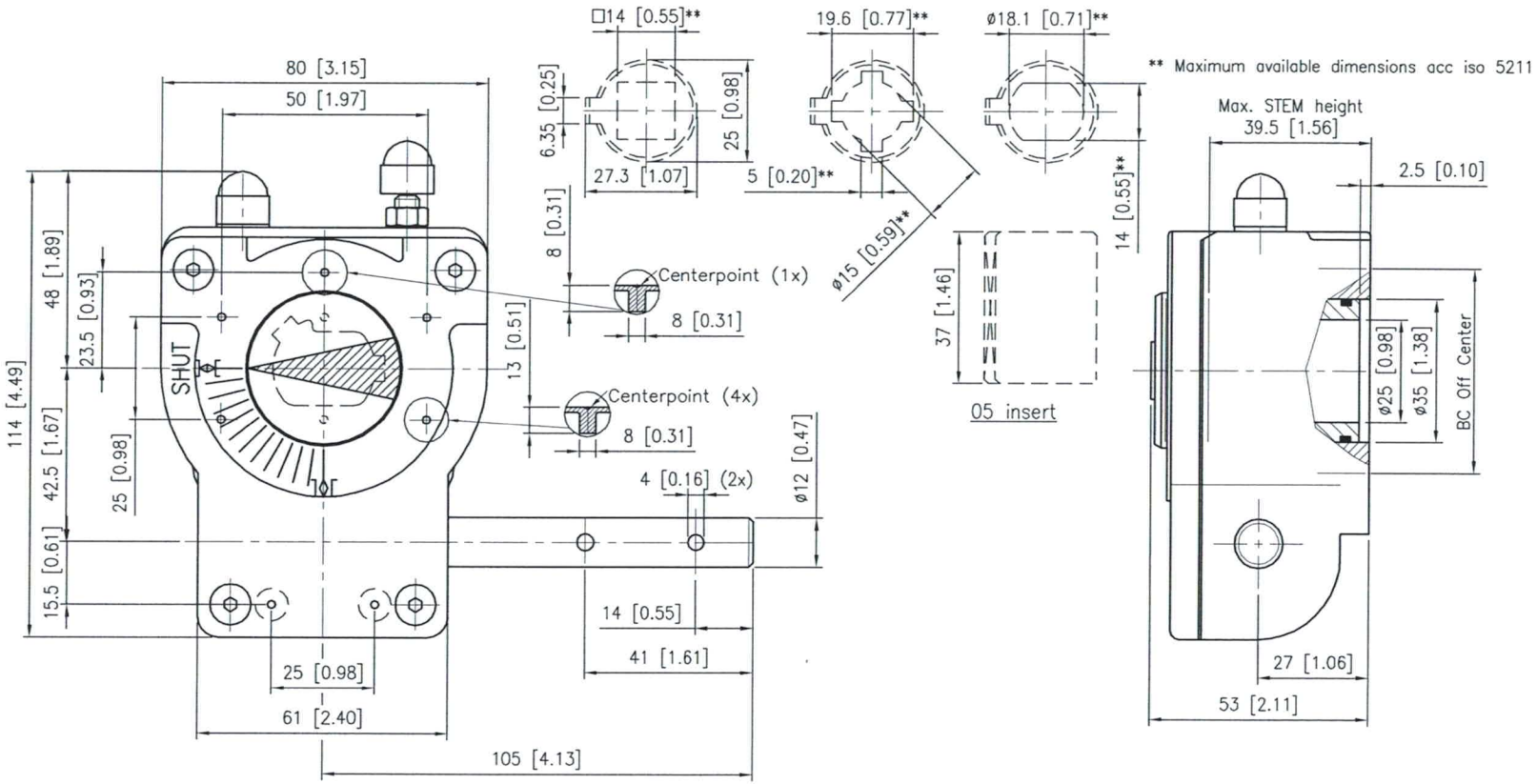

DESCRIPTION

Travel	: -5° to 95° adjustment
Ratio	: 40 : 1
Turns to Close	: 10
Weight	: 0.8 Kg. (1.8 Lb) Excl. Handwheel

MOUNTINGHOLES

Bolt Circle : Min. Ø 42 [1.65]
(Off Center) Max. Ø 70 [4.92]
Acc. ISO 5211 : F04 / F07 - F05 / F07
Bore : Min. Ø8.4[0.33] - Max. Ø15 [0.59]

TORQUE

Max. Output	: 125	Nm	(1100	lbf. in.)
Max. Input	: 12.5	Nm	(110	lbf. in.)

M.A. : 10 ±10%

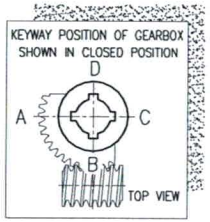

rotork gears
Nijverheidstraat 25
7581 PV Losser
The Netherlands

Gearbox 232-05 F04-F07/F05-F07

THIS DOCUMENT IS PROPERTY OF ROTORK GEARS, NEITHER THIS OR ITS CONTENT MAY BE COPIED OR USED IN ANY OTHER WAY DETRIMETAL TO THE INTEREST OF ROTORK GEARS, ACCEPTANCE OF THIS DOCUMENT SHALL CONSTITUTE ACKNOWLEDGEMENT OF THE FOREGOING CONDITIONS

Drawn : N.M Date : 09-02-07

Dwg Nr.: D232-05 Rev.: 00

Contents Subject to change without notice.

PDF created with FinePrint pdfFactory Pro trial version www.pdffactory.com

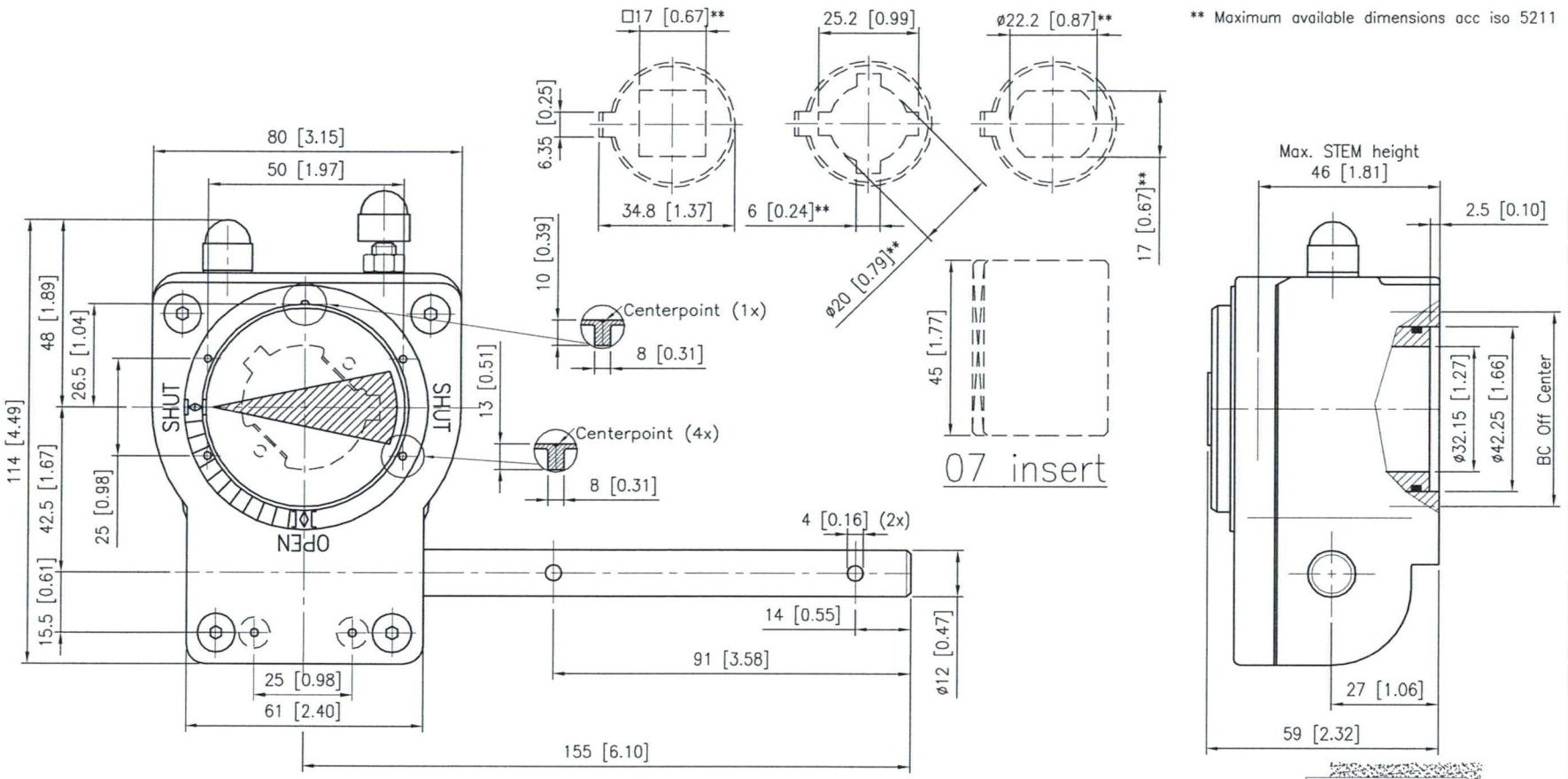

DESCRIPTION

Travel	: -5° to 95° adjustment
Ratio	: 40 : 1
Turns to Close	: 10
Weight	: 0.9 Kg. (2.0 Lb) Excl. Handwheel

MOUNTINGHOLES

Bolt Circle : Min. Ø 50 [1.97]
(Off Center) Max. Ø 70 [2.75]
Acc. ISO 5211 : F05 - F07
Bore : Min. Ø8.4[0.33] - Max. Ø20 [0.79]

TORQUE

Max. Output	: 250	Nm	(2200	lbf. in.)
Max. Input	: 25	Nm	(220	lbf. in.)

M.A. : 10 ±10%

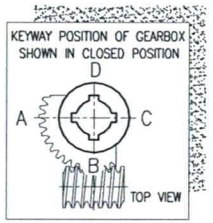

rotork gears
Nijverheidstraat 25
7581 PV Losser
The Netherlands

Gearbox 232-06 F05/F07 (prep. for insert)

THIS DOCUMENT IS PROPERTY OF ROTORK GEARS, NEITHER THIS OR ITS CONTENT MAY BE COPIED OR USED IN ANY OTHER WAY DETRIMETAL TO THE INTEREST OF ROTORK GEARS, ACCEPTANCE OF THIS DOCUMENT SHALL CONSTITUTE ACKNOWLEDGEMENT OF THE FOREGOING CONDITIONS

Drawn : N.M Date : 09-02-07
Dwg Nr.: D232-06 Rev.: 00

Contents Subject to change without notice.

PDF created with FinePrint pdfFactory Pro trial version www.pdffactory.com

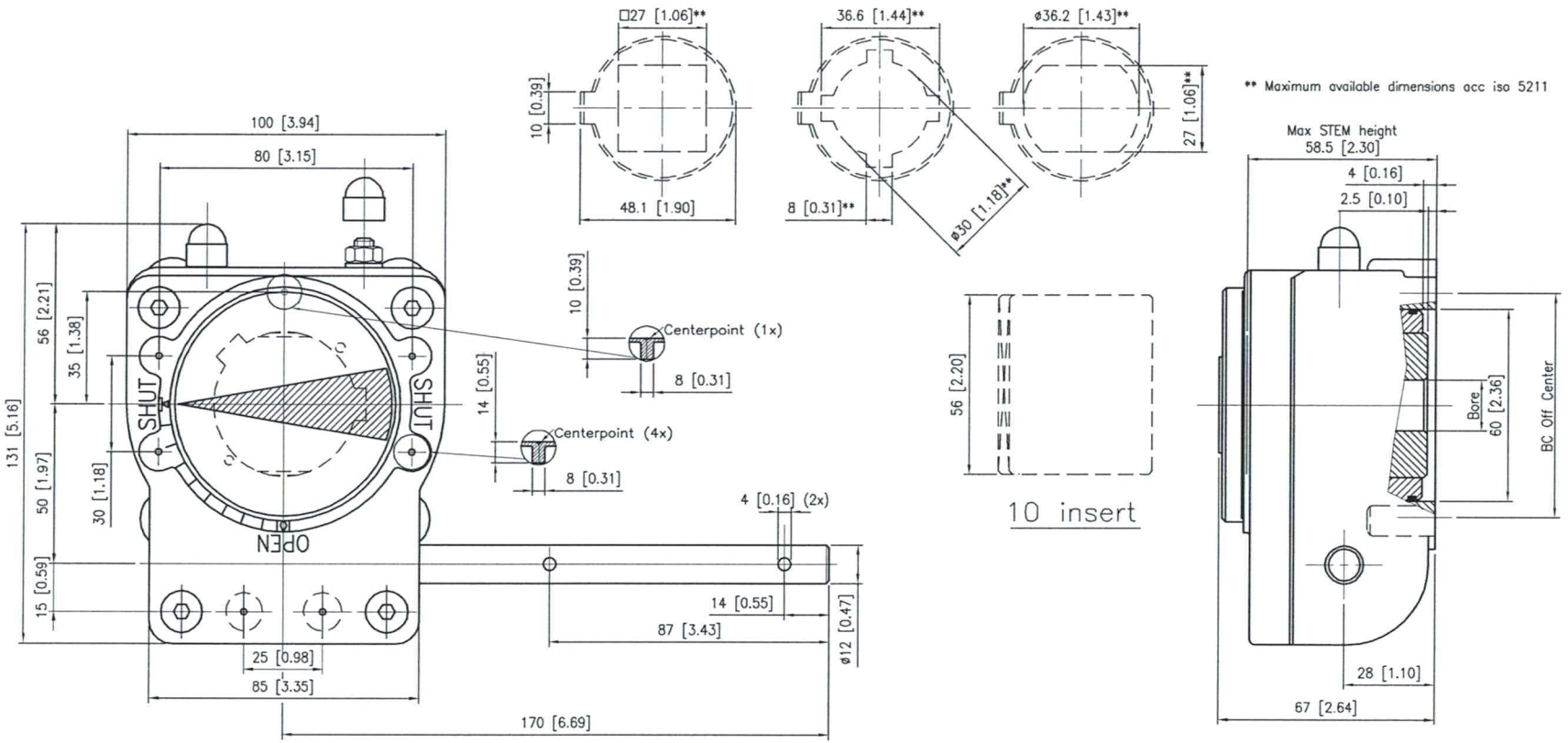

DESCRIPTION

Travel : -5° to 95° adjustment
Ratio : 37 : 1
Turns to Close : 9.25
Weight : 1.55 Kg. (3.43 Lb) Excl. Handwheel

MOUNTINGHOLES

Bolt Circle : Min. Ø 70 [2.76]
(Off Center) Max. Ø 102 [4.02]
Acc. ISO 5211 : F07 - F10
Bore : Min. Ø16 [0.63] - Max. Ø30 [1.18]

TORQUE

Max. Output : 500 Nm (4400 lbf. in.)
Max. Input : 41.7 Nm (362 lbf. in.)
M.A. : 12 ±10%

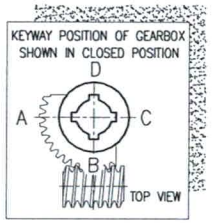

rotork gears
Nijverheidstraat 25
7581 PV Losser
The Netherlands

Gearbox 232-08 F07/F10 (prep. for insert)

THIS DOCUMENT IS PROPERTY OF ROTORK GEARS, NEITHER THIS OR ITS CONTENT MAY BE COPIED OR USED IN ANY OTHER WAY DETRIMETAL TO THE INTEREST OF ROTORK GEARS, ACCEPTANCE OF THIS DOCUMENT SHALL CONSTITUTE ACKNOWLEDGEMENT OF THE FOREGOING CONDITIONS

Drawn : N.M Date : 09-02-07
Dwg Nr.: D232-08 Rev.: 00

Contents Subject to change without notice.

PDF created with FinePrint pdfFactory Pro trial version www.pdffactory.com

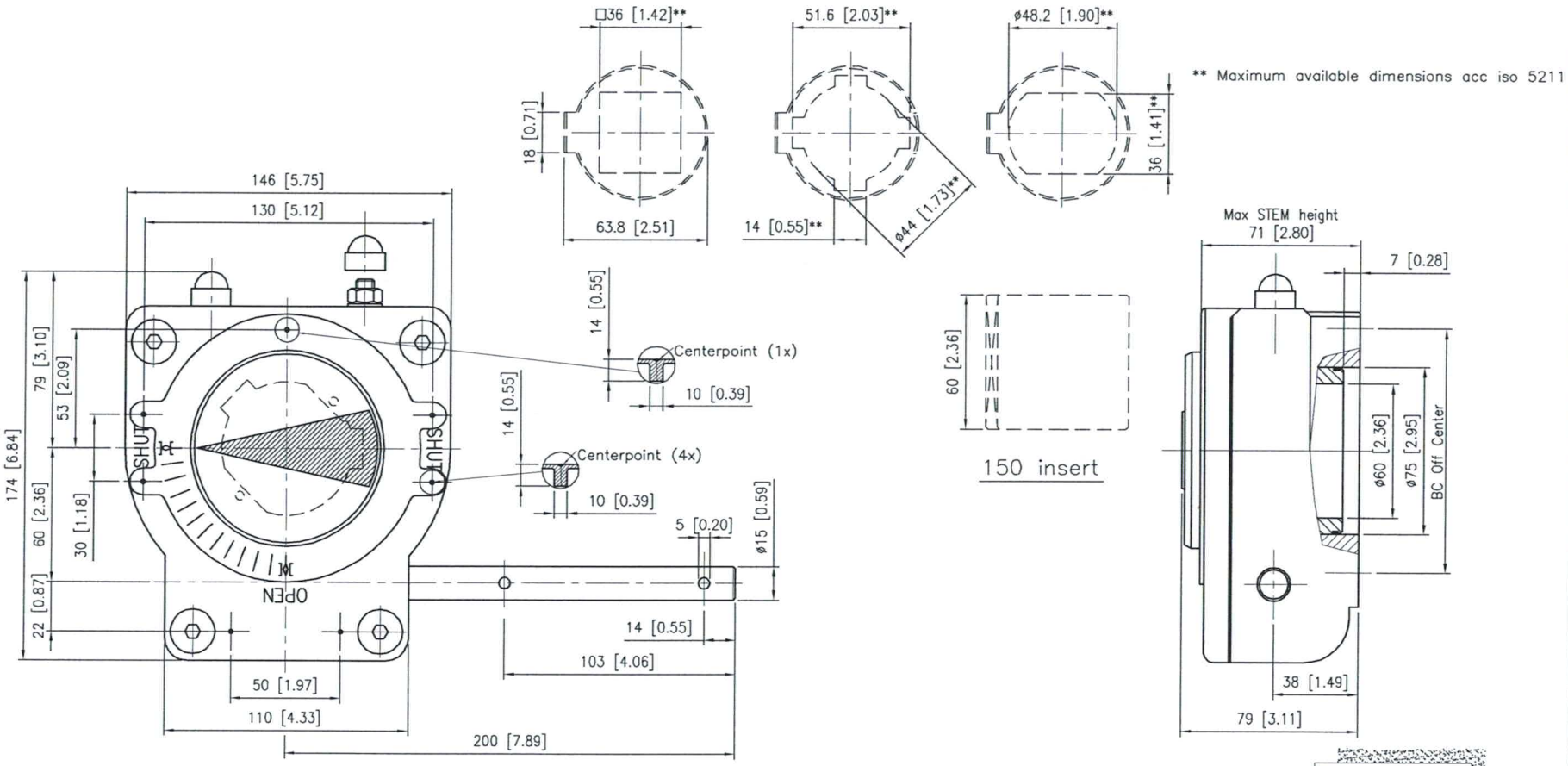

DESCRIPTION

Travel	: -5° to 95° adjustment
Ratio	: 45 : 1
Turns to Close	: 11.25
Weight	: 2.9 Kg. (6.3 Lb) Excl. Handwheel

MOUNTINGHOLES

Bolt Circle (Off Center)	: Min. Ø 102 [4.02] Max. Ø 125 [4.92]
Acc. ISO 5211	: F10 - F12
Bore :	Min. Ø16[0.63] - Max. Ø44[1.73]

TORQUE

Max. Output	: 900	Nm	(7920	lbf. in.)
Max. Input	: 75	Nm	(660	lbf. in.)

M.A. : 12 ± 10%

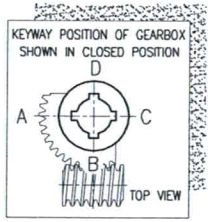

rotork gears
Nijverheidstraat 25
7581 PV Lasser
The Netherlands

Gearbox 232-11 F10/F12 (prep. for insert)

THIS DOCUMENT IS PROPERTY OF ROTORK GEARS, NEITHER THIS OR ITS CONTENT MAY BE COPIED OR USED IN ANY OTHER WAY DETRIMETAL TO THE INTEREST OF ROTORK GEARS, ACCEPTANCE OF THIS DOCUMENT SHALL CONSTITUTE ACKNOWLEDGEMENT OF THE FOREGOING CONDITIONS

Drawn : N.M Date : 09-02-07

Dwg Nr.: D232-11 Rev.: 00

Contents Subject to change without notice.

PDF created with FinePrint pdfFactory Pro trial version www.pdffactory.com

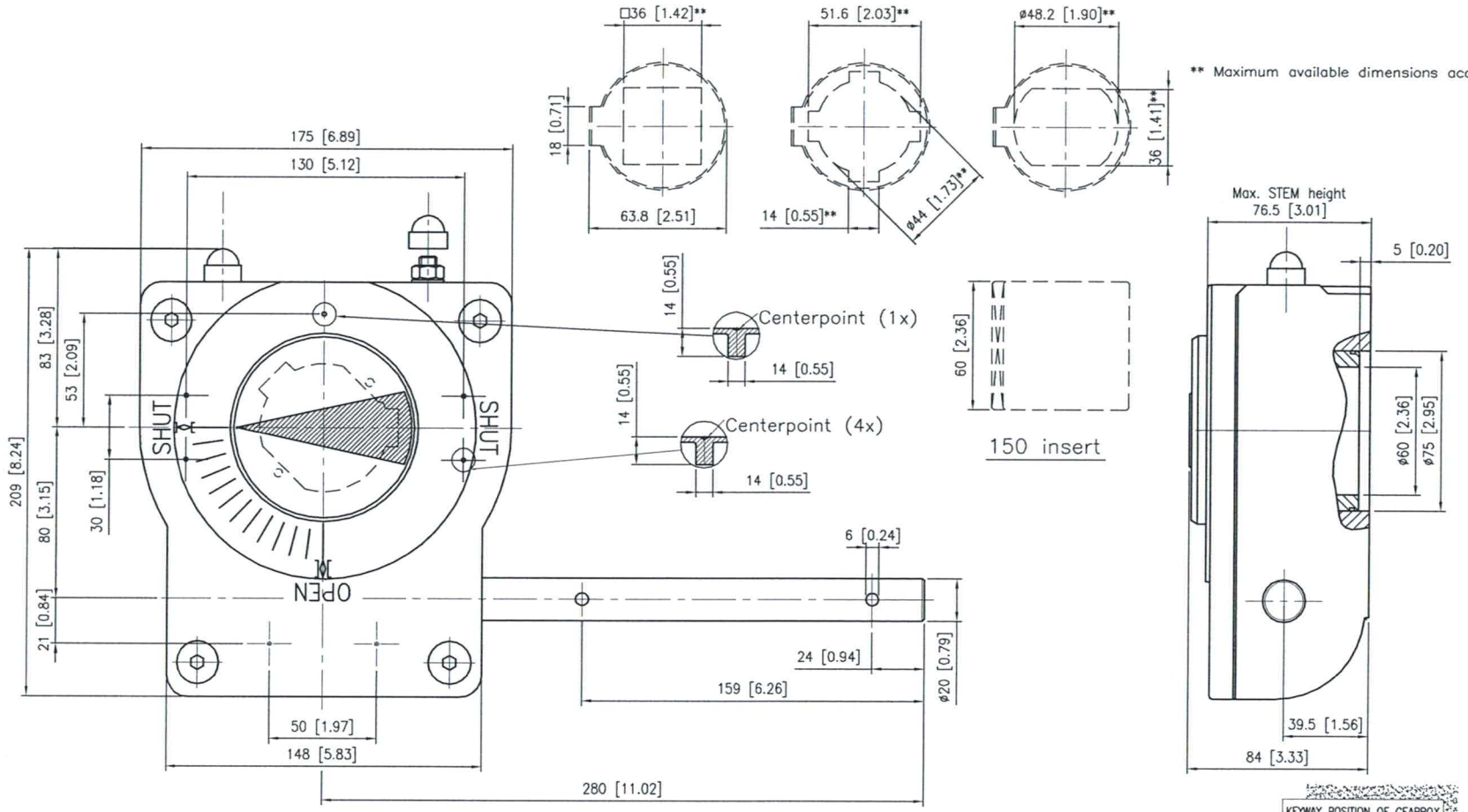

DESCRIPTION

Travel	: -5° to 95° adjustment
Ratio	: 40 : 1
Turns to Close	: 10
Weight	: 5.4 Kg. (11.9 Lb) Excl. Handwheel

MOUNTINGHOLES

Bolt Circle : Min. Ø 102 [4.02]
(Off Center) Max. Ø 140 [5.51]
Acc. ISO 5211 : F10 - F12/F14
Bore : Min. Ø16 [0.63] - Max. Ø44 [1.73]

TORQUE

Max. Output	: 1000	Nm	(8800	lbf. in.)
Max. Input	: 83	Nm	(730.4	lbf. in.)

M.A. : 12 ±10%

KEYWAY POSITION OF GEARBOX SHOWN IN CLOSED POSITION

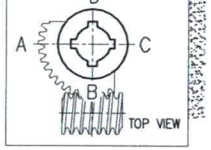

rotork gears
Nijverheidstraat 25
7581 PV Losser
The Netherlands

Gearbox 232-13 F10-F12/F14(prep. for insert)

THIS DOCUMENT IS PROPERTY OF ROTORK GEARS, NEITHER THIS OR ITS CONTENT MAY BE COPIED OR USED IN ANY OTHER WAY DETRIMETAL TO THE INTEREST OF ROTORK GEARS, ACCEPTANCE OF THIS DOCUMENT SHALL CONSTITUTE ACKNOWLEDGEMENT OF THE FOREGOING CONDITIONS

Drawn : N.M Date : 09-02-07

Dwg Nr.: D232-13 Rev.: 00

Contents Subject to change without notice.

PDF created with FinePrint pdfFactory Pro trial version www.pdffactory.com

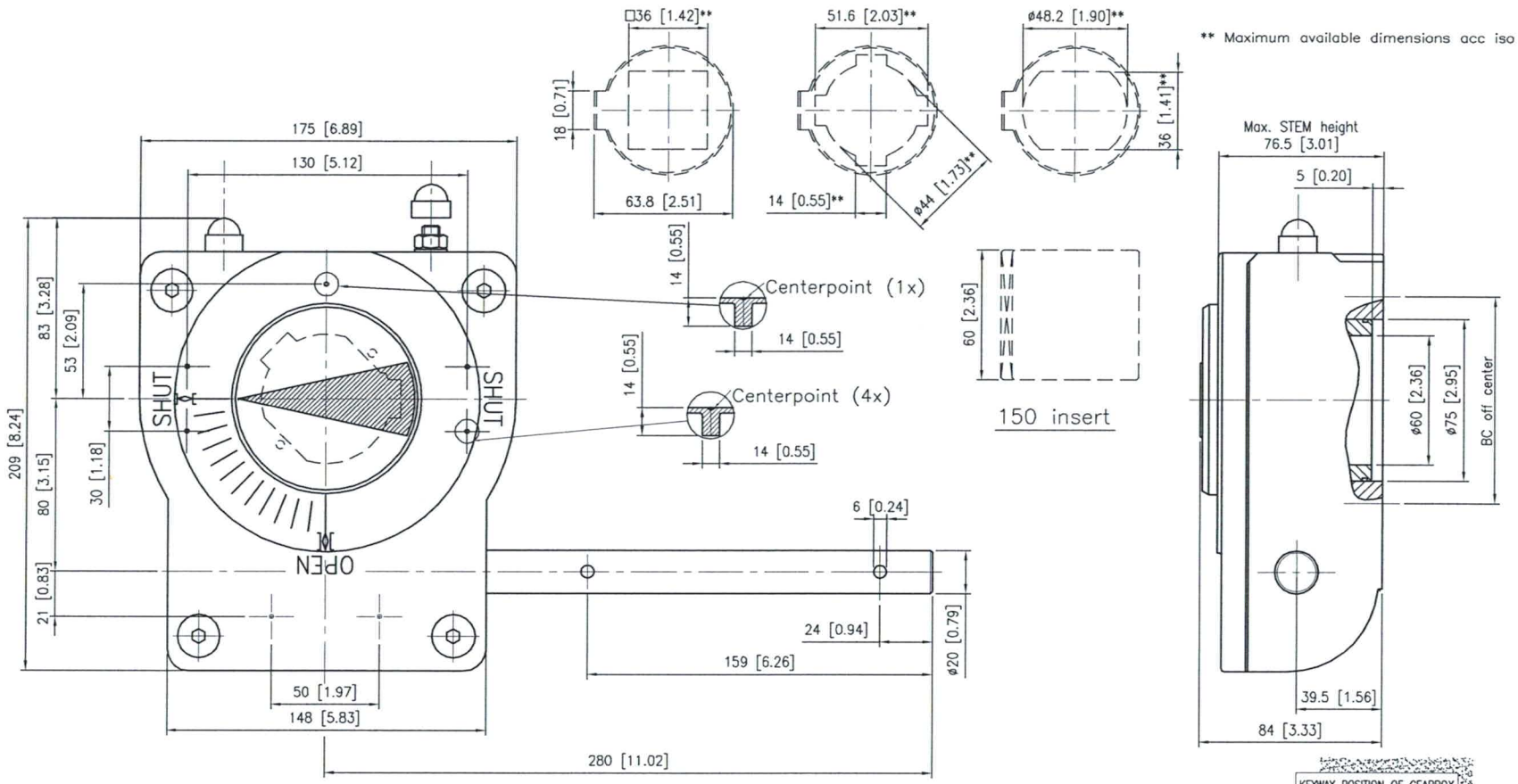

DESCRIPTION

Travel	: -5° to 95° adjustment
Ratio	: 40 : 1
Turns to Close	: 10
Weight	: 5.4 Kg. (11.9 Lb) Excl. Handwheel

MOUNTINGHOLES

Bolt Circle : Min. Ø 102 [4.02]
(Off Center) Max. Ø 140 [5.51]
Acc. ISO 5211 : F10 - F12 / F14
Bore : Min. Ø16 [0.63] - Max. Ø44 [1.73]

TORQUE

Max. Output	: 1500	Nm	(13200	lbf. in.)
Max. Input	: 125	Nm	(1100	lbf. in.)

M.A. : 12 ±10%

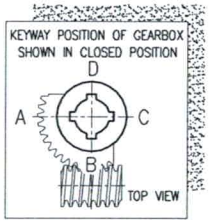

rotork-gears
Nijverheidstraat 25
7581 PV Losser
The Netherlands

Gearbox 232-14 F10-F12/F14 (prep. for insert)

THIS DOCUMENT IS PROPERTY OF ROTORK GEARS, NEITHER THIS OR ITS CONTENT MAY BE COPIED OR USED IN ANY OTHER WAY DETRIMETAL TO THE INTEREST OF ROTORK GEARS, ACCEPTANCE OF THIS DOCUMENT SHALL CONSTITUTE ACKNOWLEDGEMENT OF THE FOREGOING CONDITIONS

Drawn : N.M Date : 09-02-07
Dwg Nr.: D232-14 Rev.: 00

Contents Subject to change without notice.

PDF created with FinePrint pdfFactory Pro trial version www.pdffactory.com